Exploded view

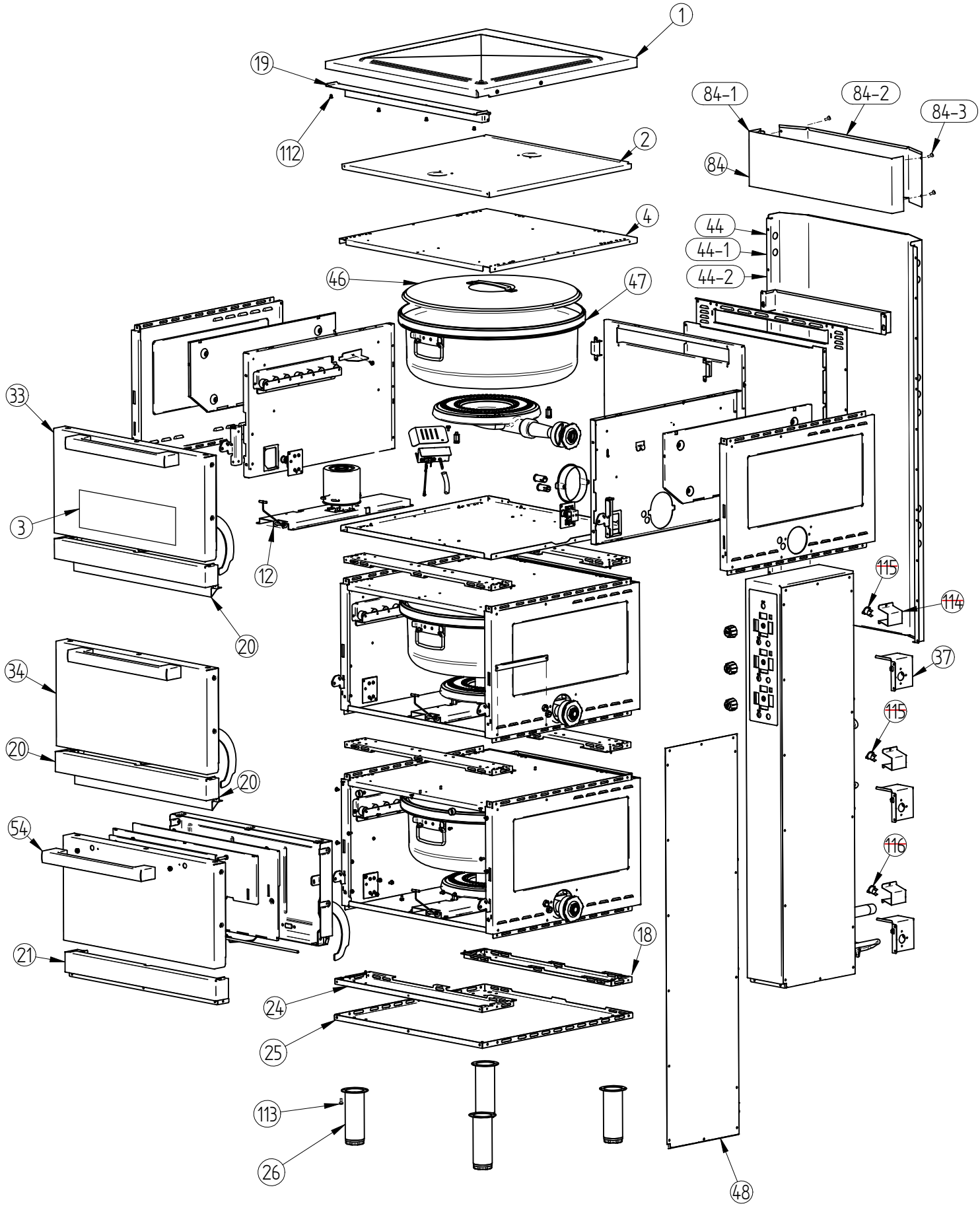

Exploded view

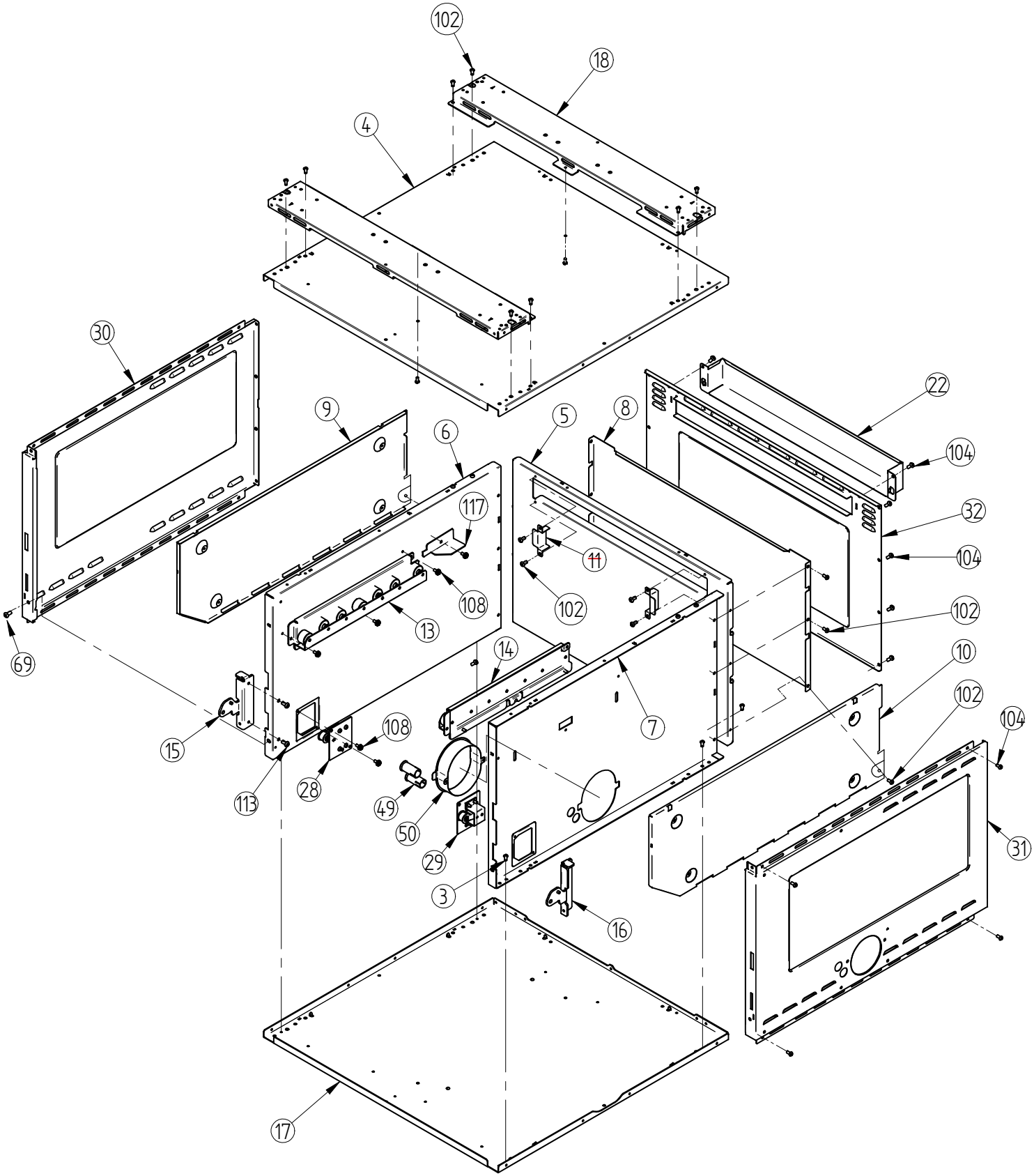

Exploded view

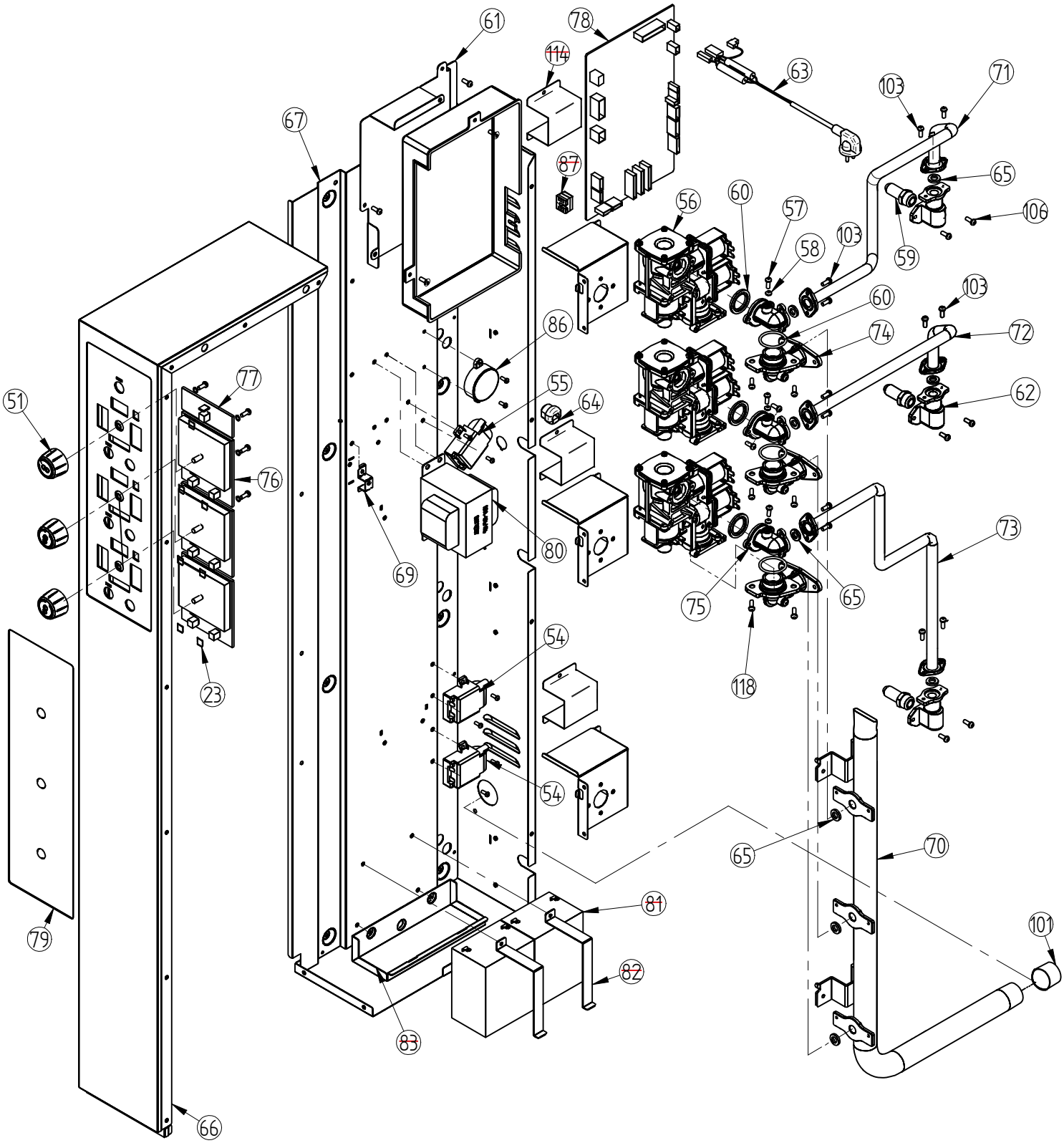

Exploded view

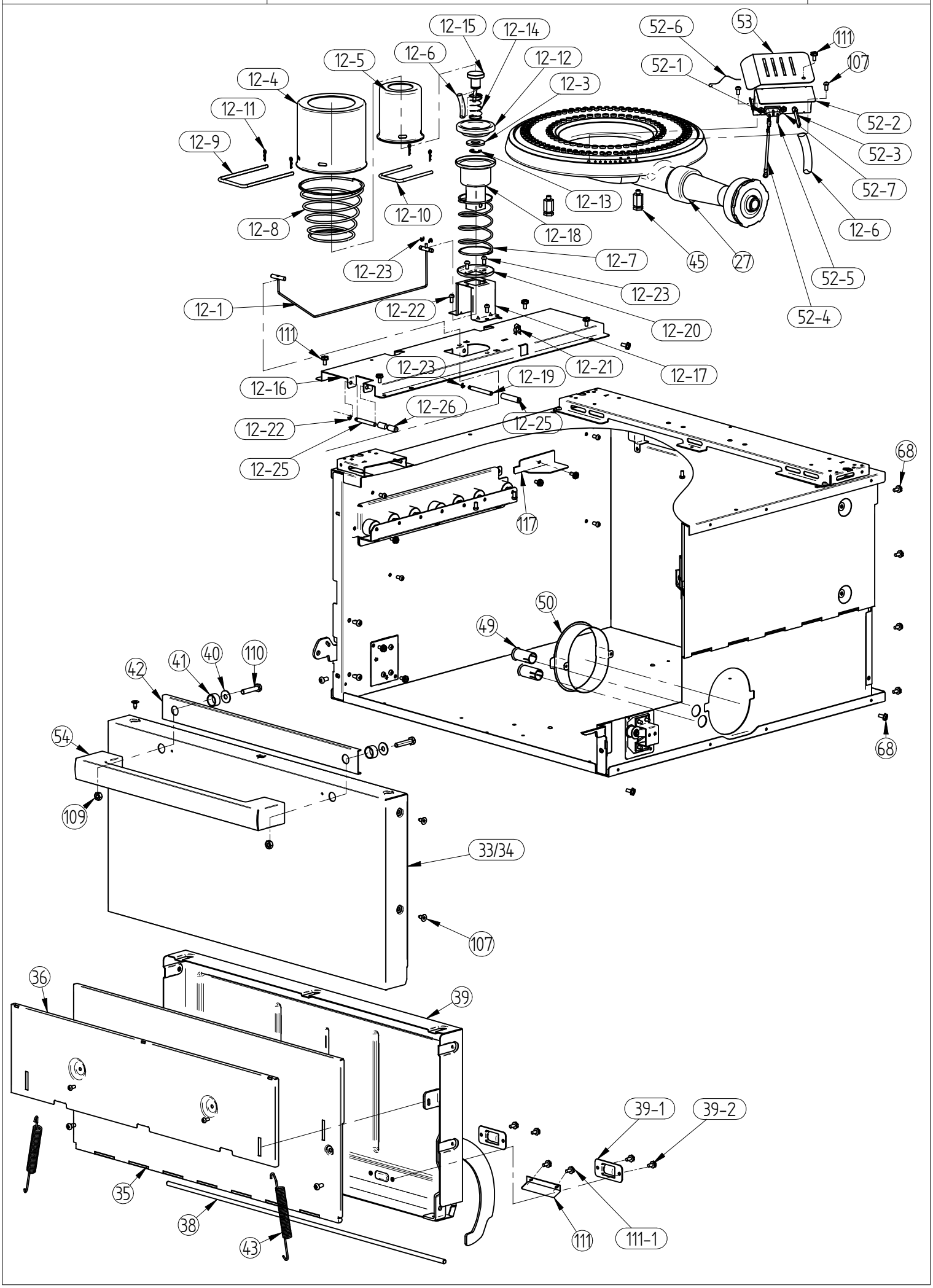
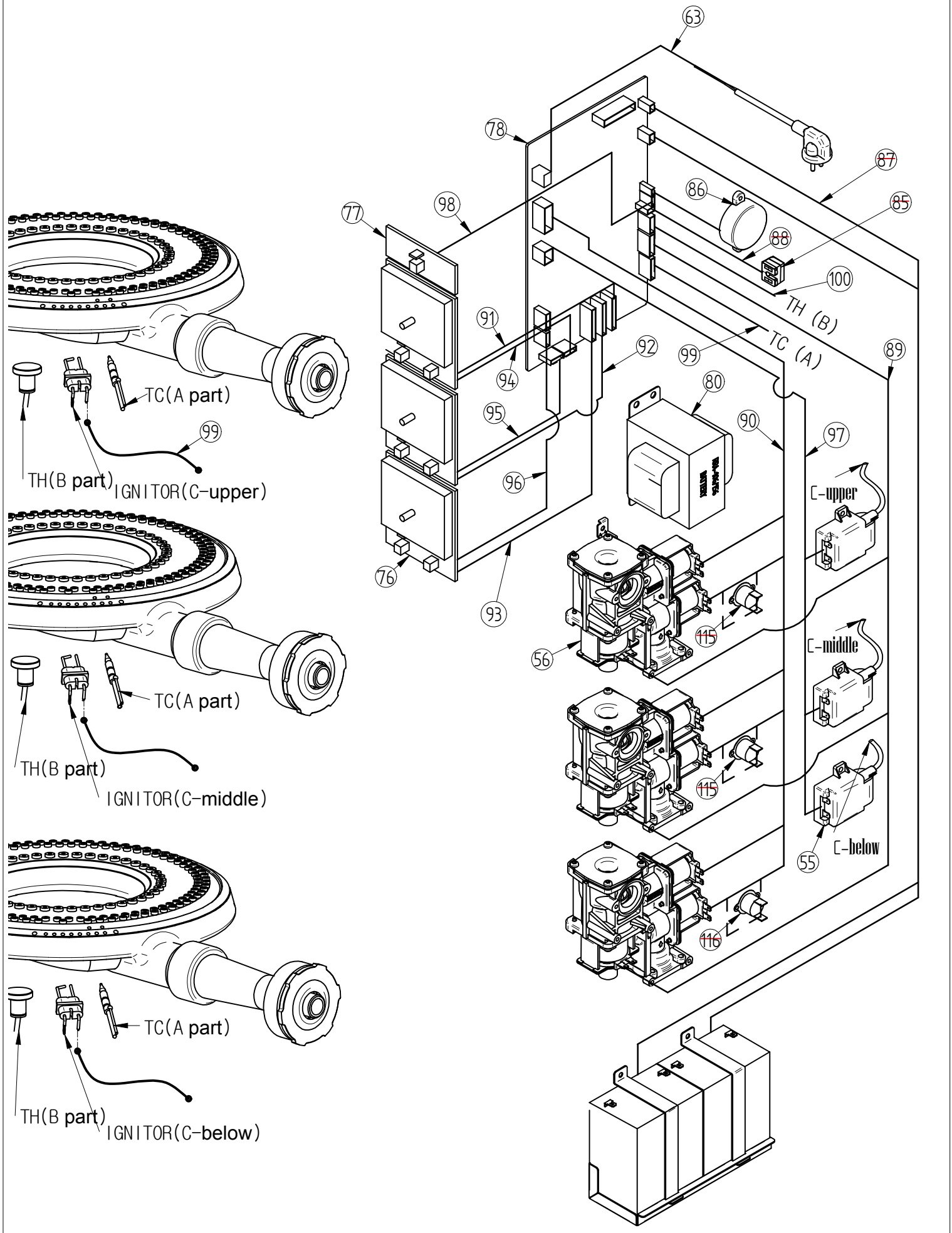
Exploded view